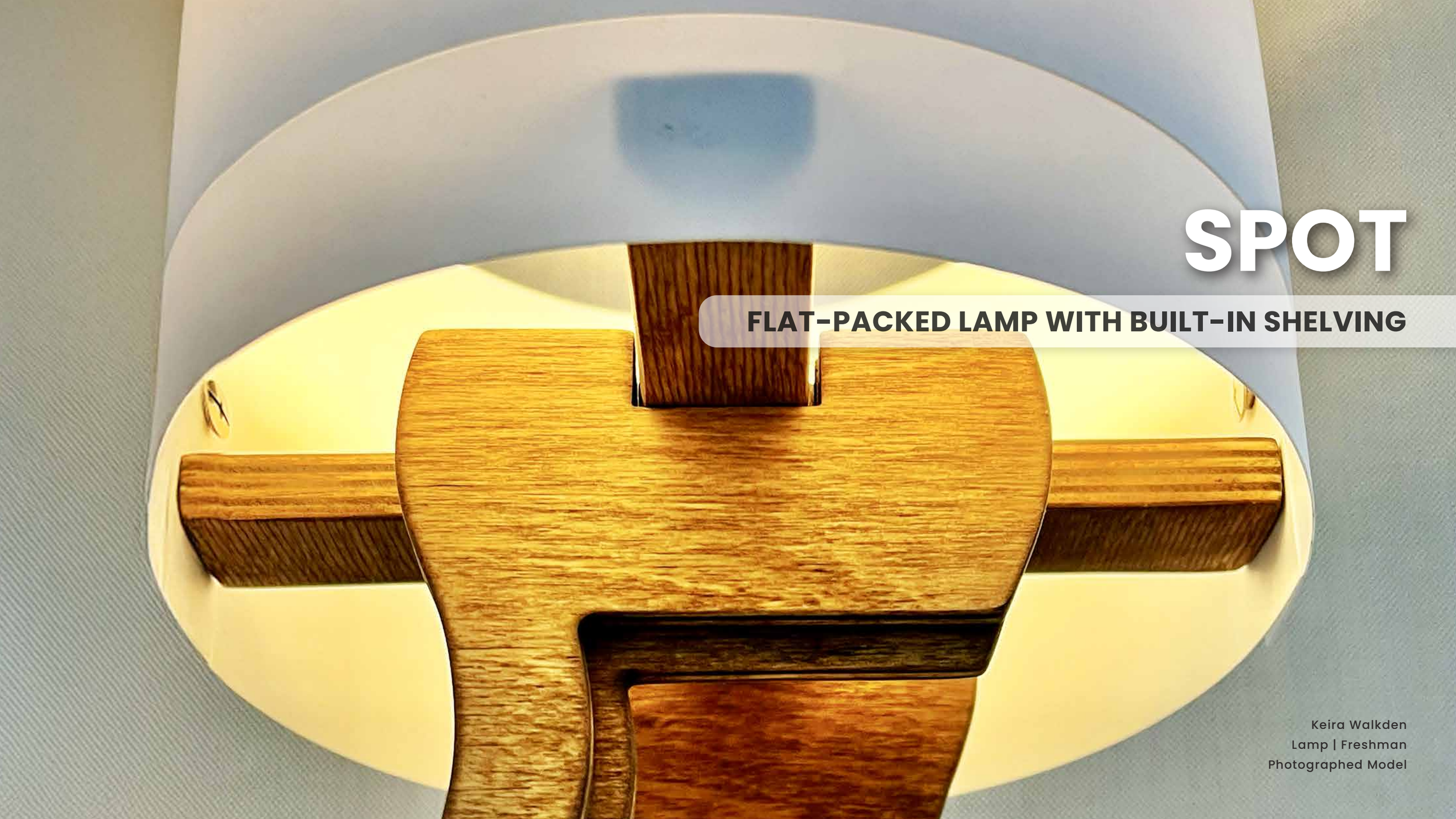

SPOT

FLAT-PACKED LAMP WITH BUILT-IN SHELVING

Keira Walkden
Lamp | Freshman
Photographed Model

THE CHALLENGE

In small living spaces, lamps often compete for surface area with other daily-use items.





THE SOLUTION

Digit integrates shelving into its structure, allowing light and storage to coexist.

Keira Walkden
Lamp | Freshman
Photographed Model

FORM EXPLORATION

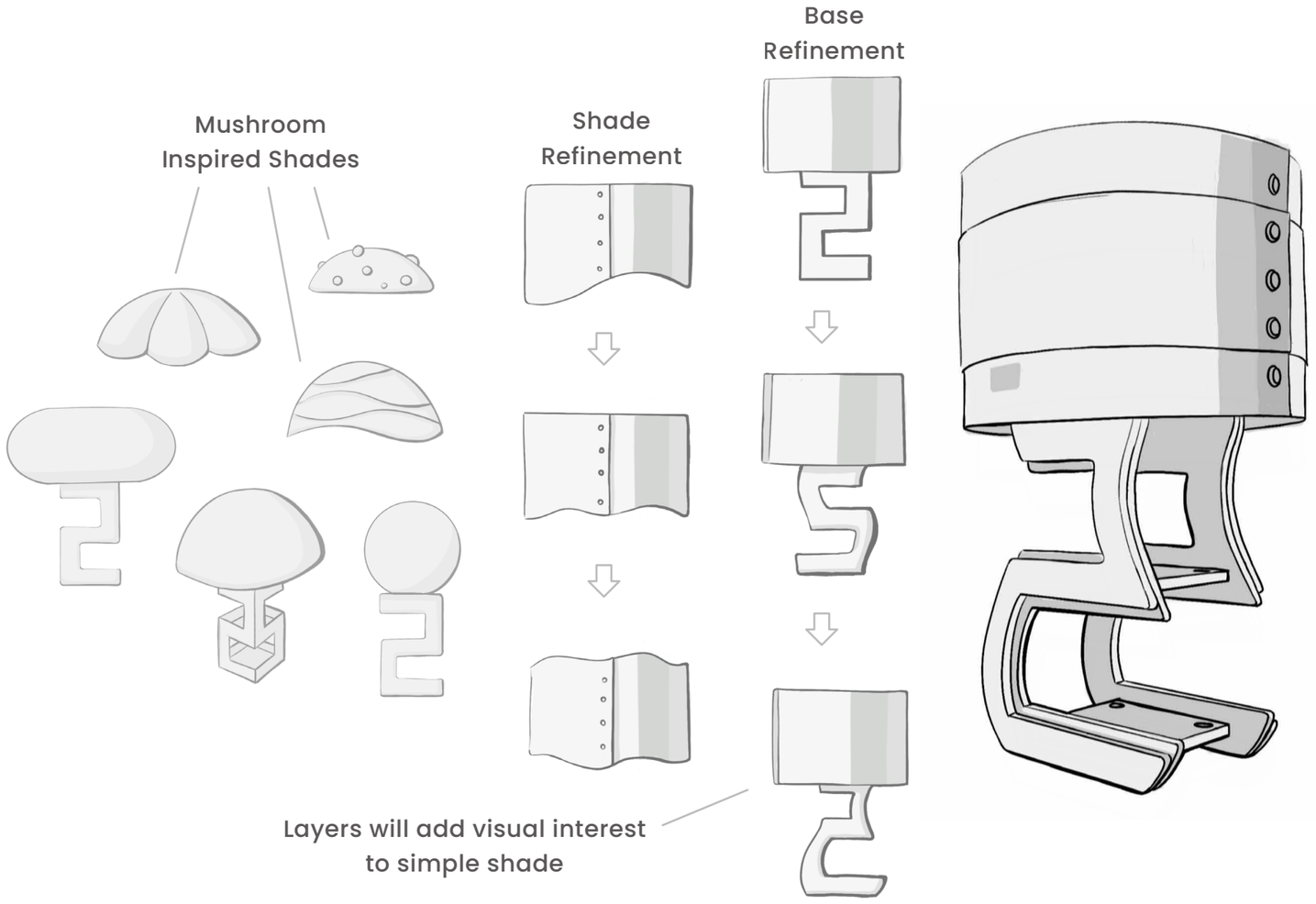

TEXTURE INSPIRATION

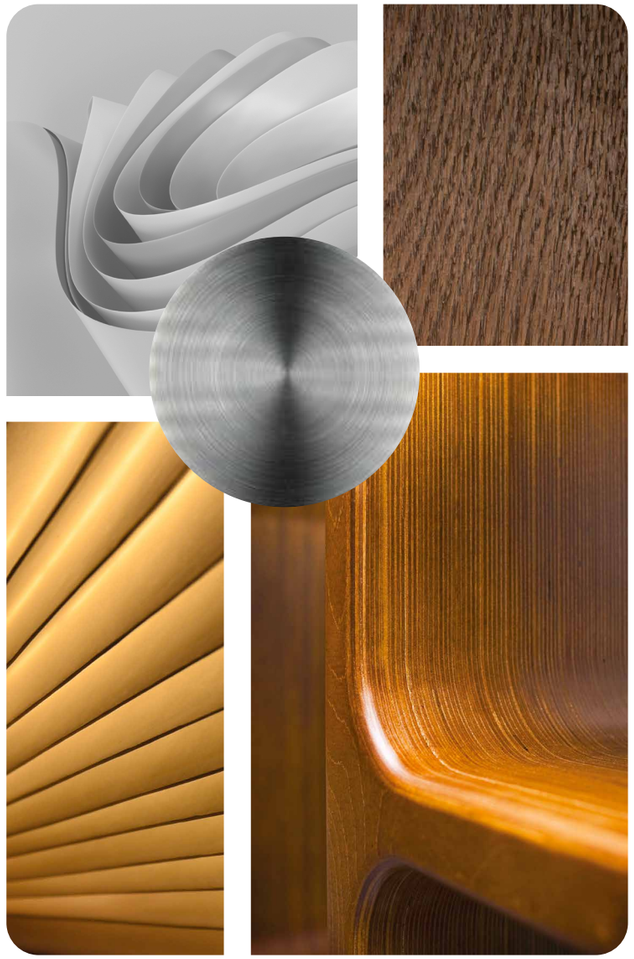

Keira Walkden
Lamp | Freshman

ASSEMBLY

PIECES

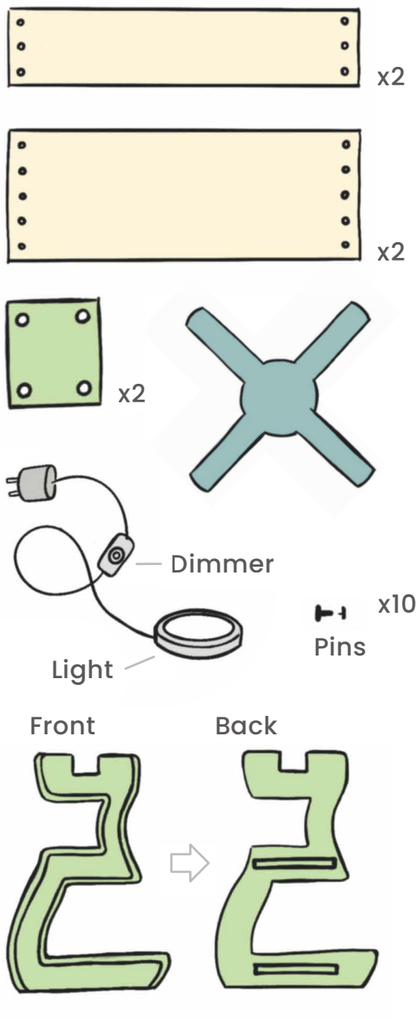

FLAT PACKABLE

12.5” x 2” x 6”





LASER CUT

- .25in Plywood
- .50in Plywood
- .02in Polystyrene
- Metal

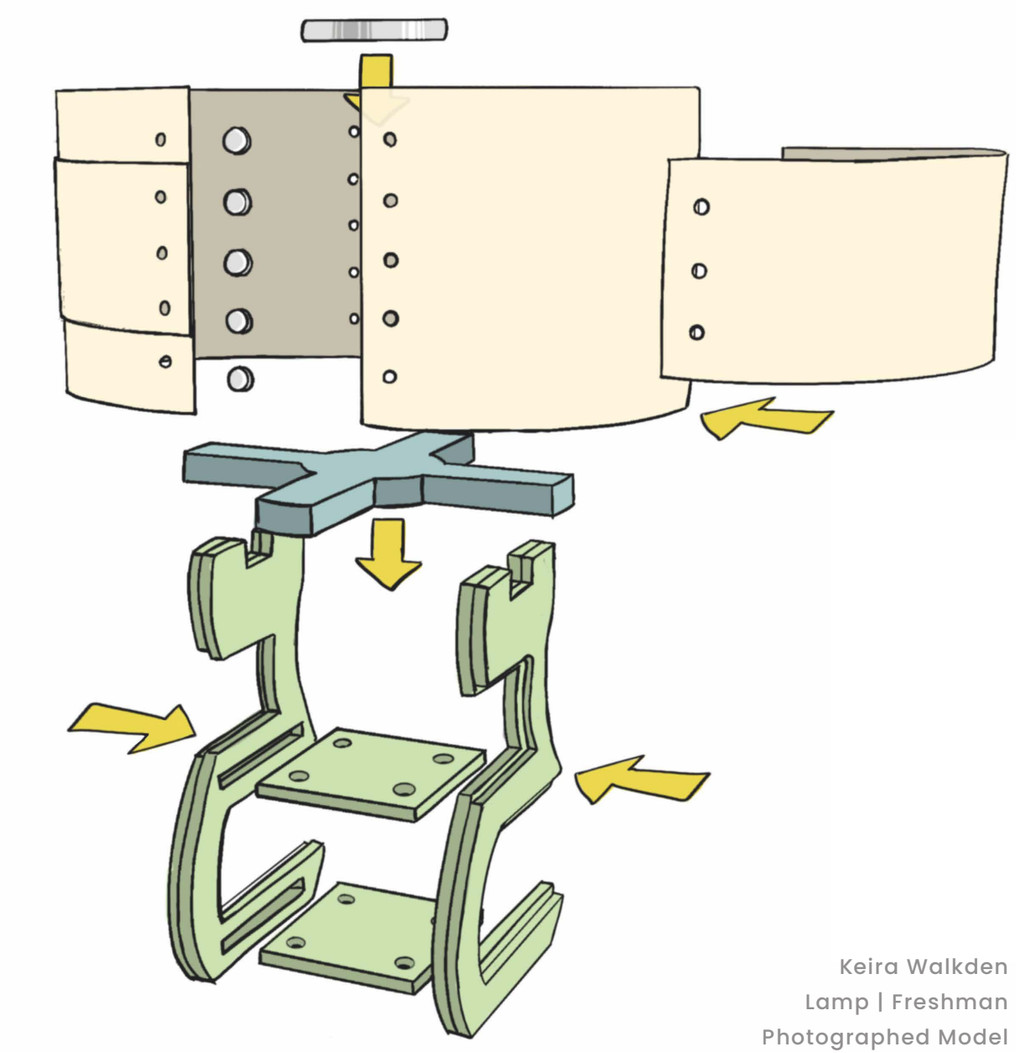

Keira Walkden
Lamp | Freshman
Photographed Model

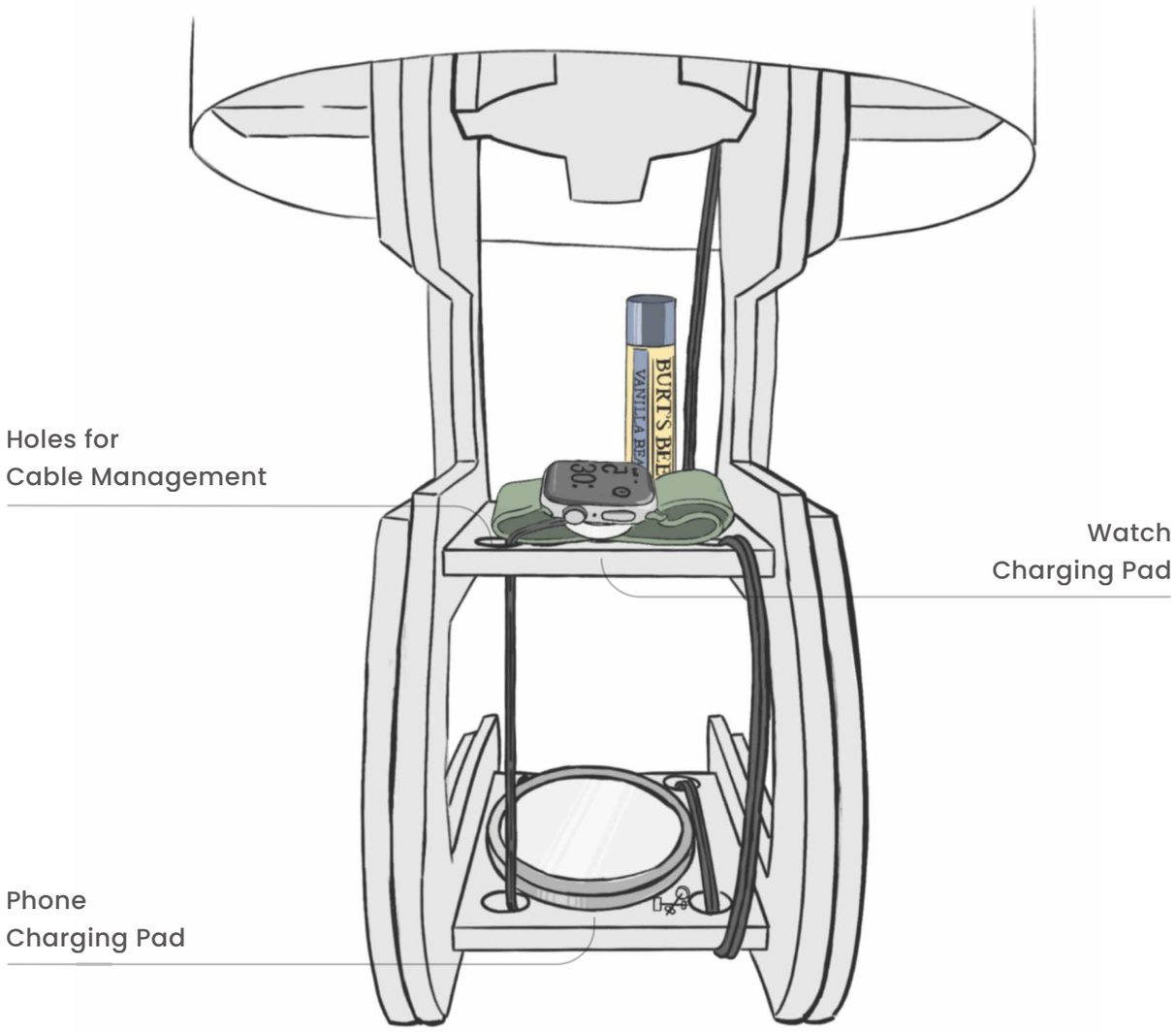

BUILT-IN ORGANIZATION

DIMENSIONS

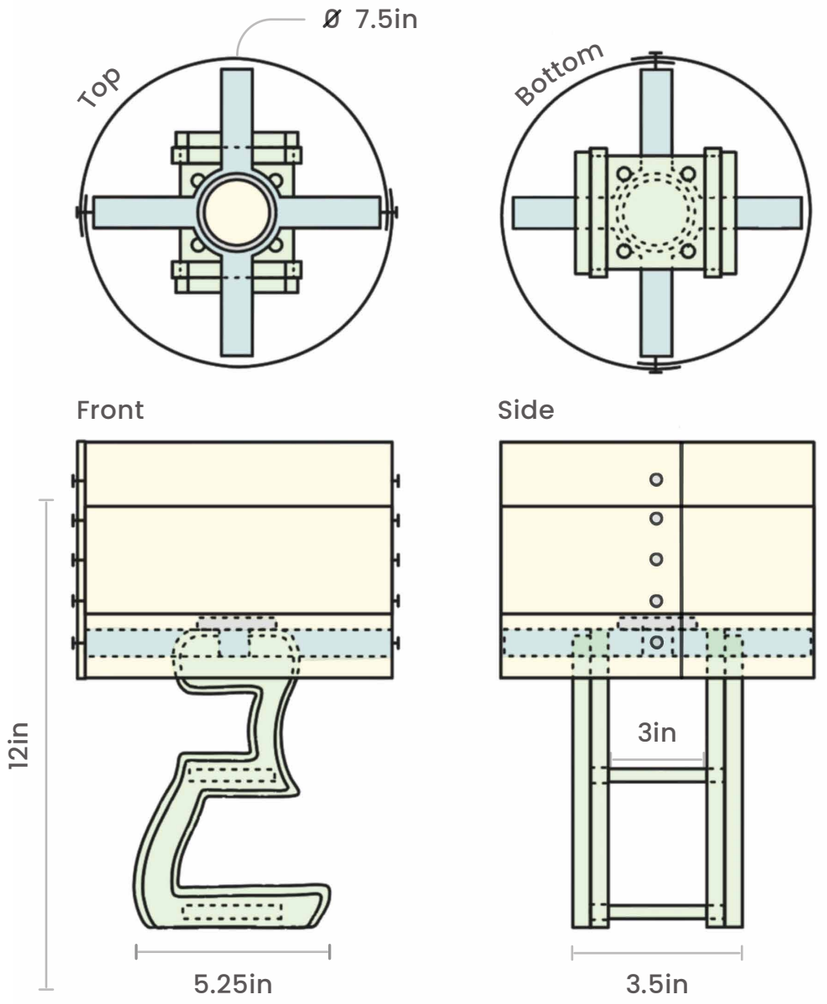

Keira Walkden
Lamp | Freshman



SPOT

LIGHTING A MODERN HOME

Keira Walkden
Lamp | Freshman
Photographed Model